M1:20

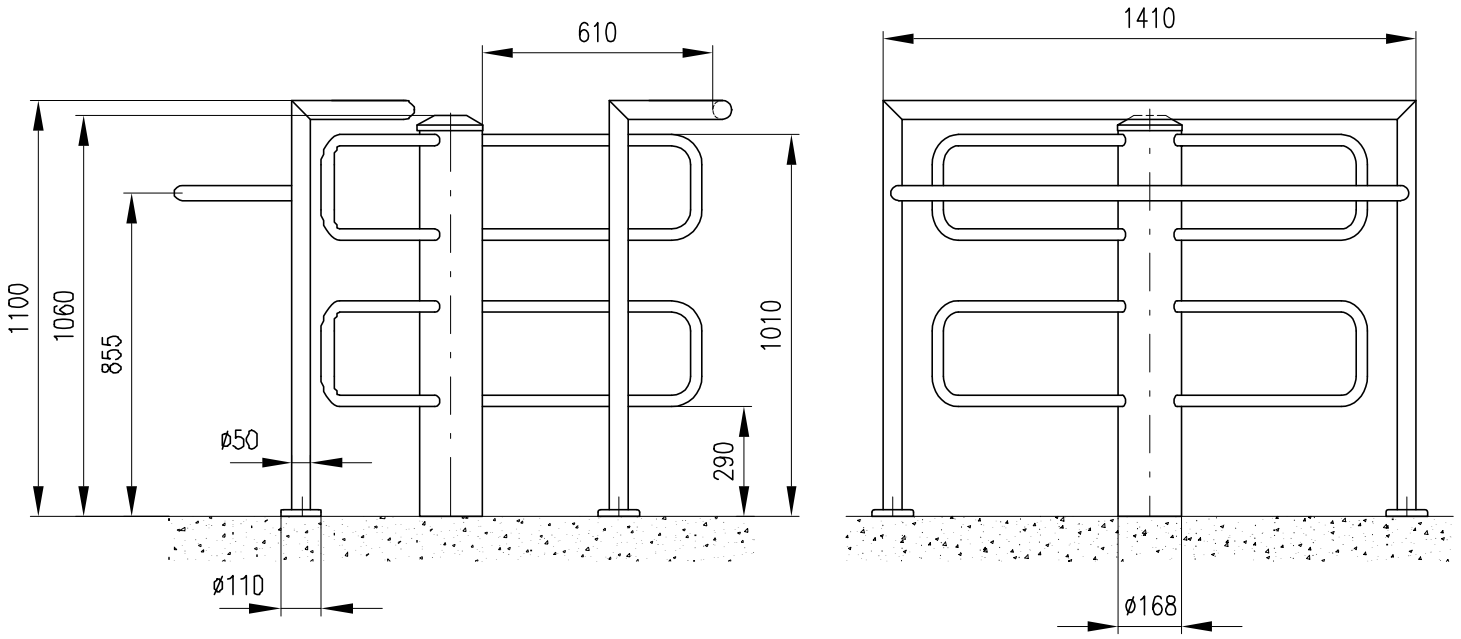

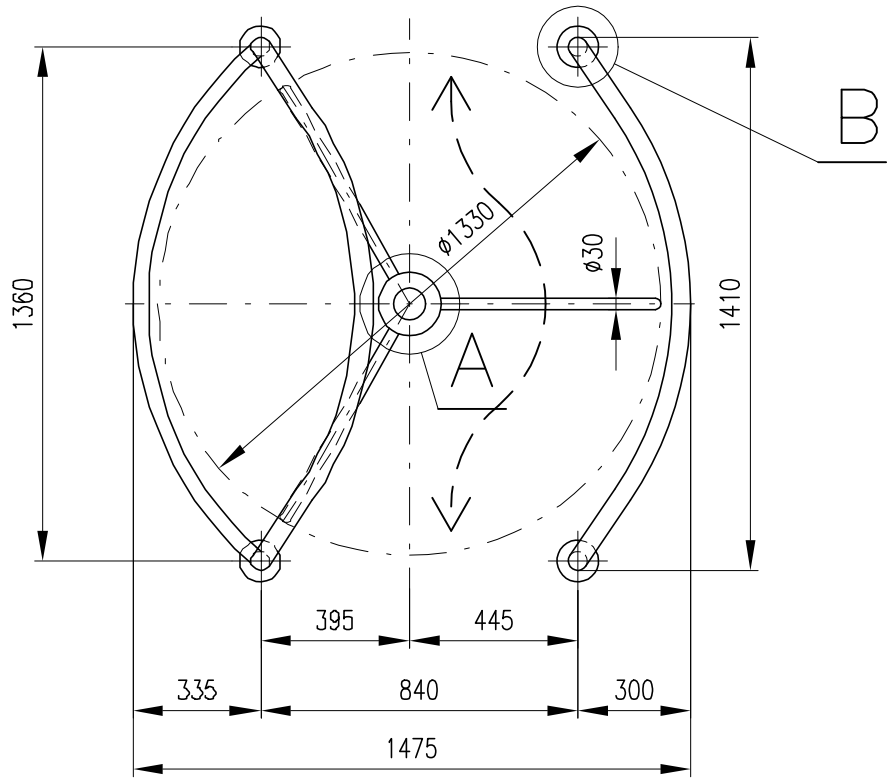

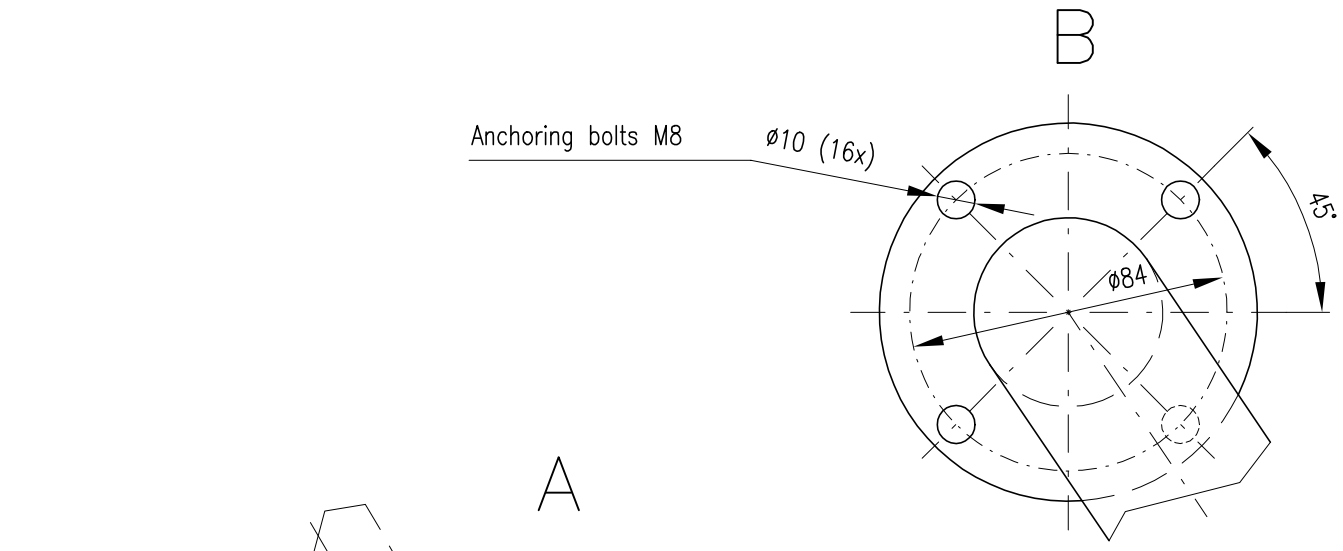

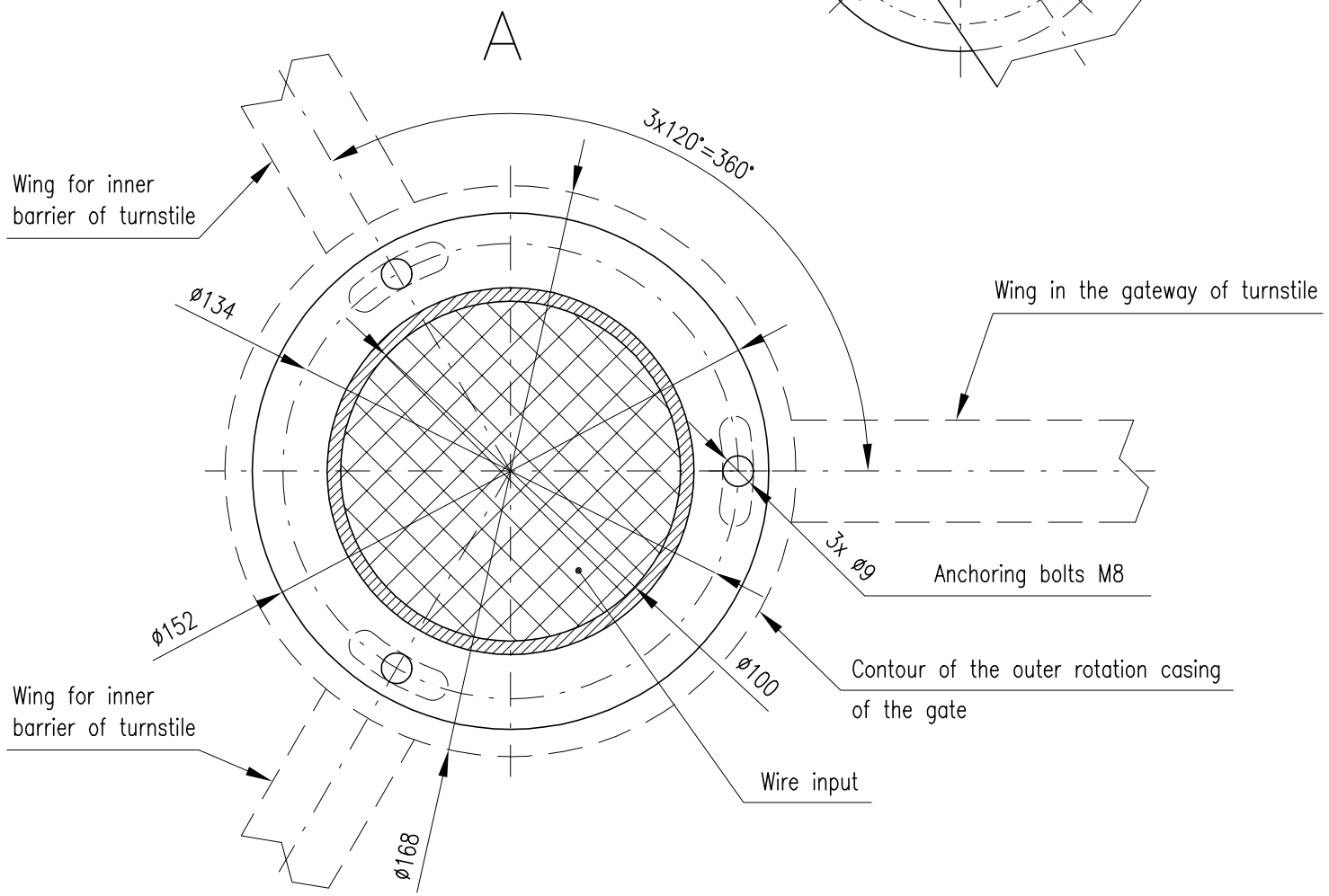

– Kable entry for RFID reader by any barrier

Date	Drawed by	Material					
11/10/2010							CODARINI
Size A3	Project: Turnstile ROUND–J–S					Order No.	Part/Parts
Scale 1:2	Title: Anchoring dimensions			D.No. PK 101011–2			Version