M1:20

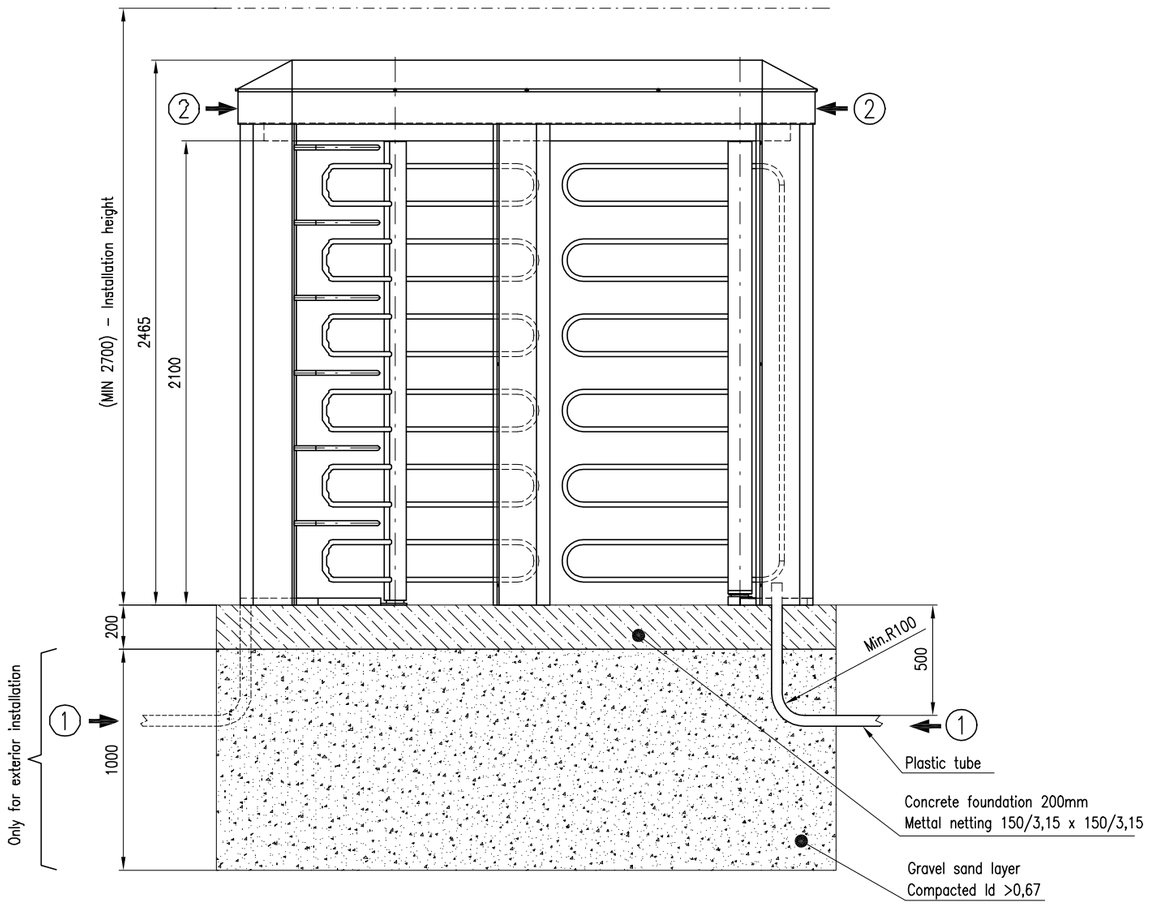

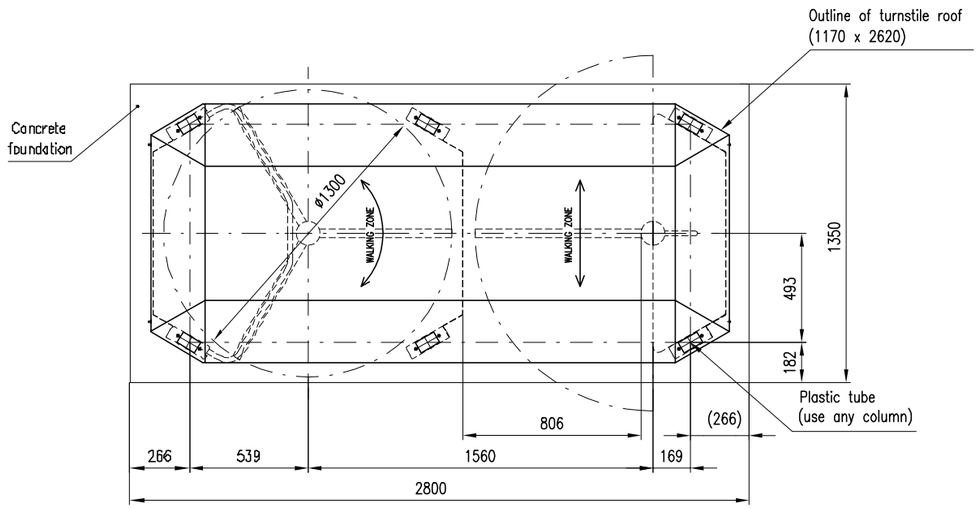

LEGEND:

1. OPTIONS – BOTTOM WIRE INPUT – USABLE MOSTLY FOR EXTERIOR INSTALLATION

2. OPTIONS – TOP WIRE INPUT – USABLE MOSTLY FOR INTERIOR INSTALLATION

Turnstile foundation: REXON-DEA-GATE-FullHeight-U(800)

M1:10

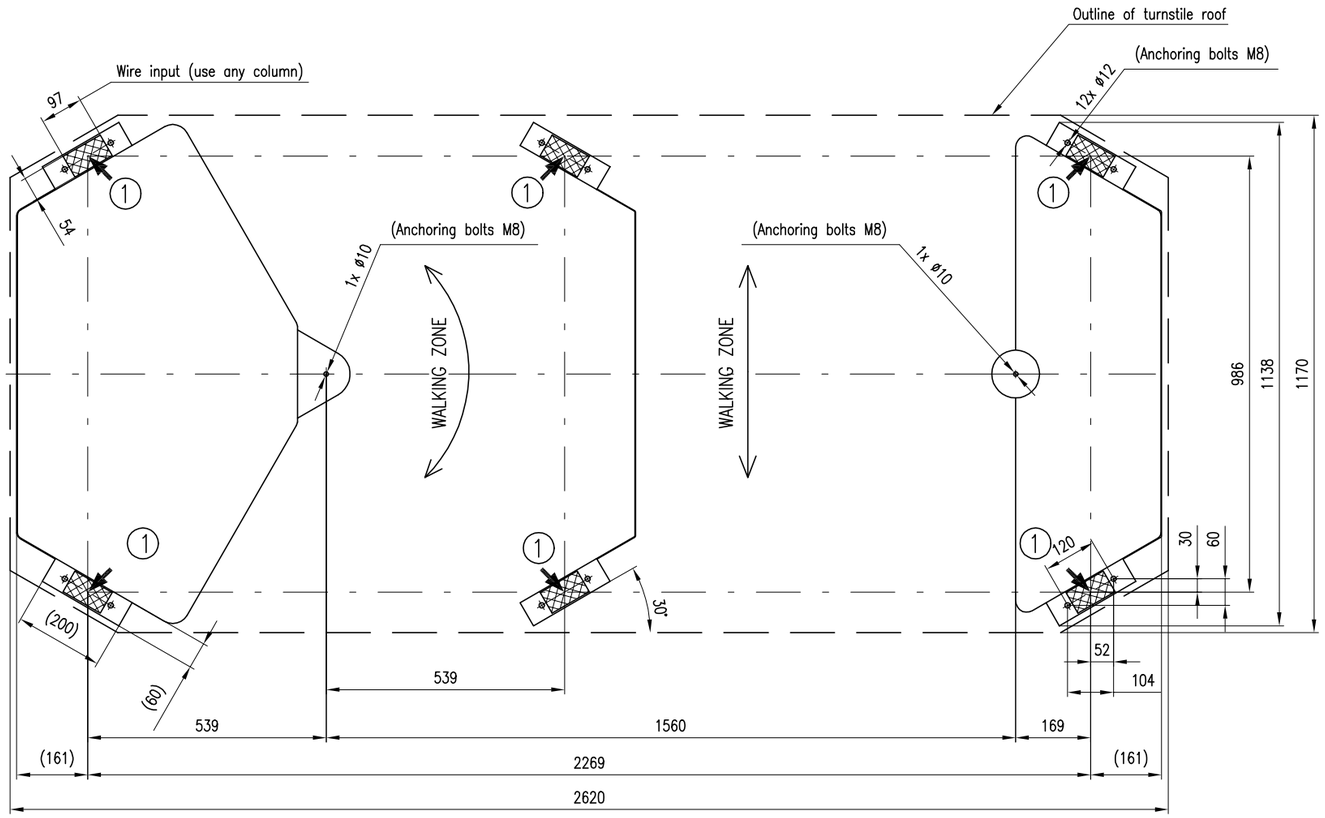

	Date	Drawed by	Material	Order No.	
	28.11.2013				CODARINI
Size A2	Project: Turnstile REXON-DEA-GATE-FullHeight-U(800)				
Scale 1:10	Title: Anchoring dimensions			D.No. PJ 131128-1	Part/Parts