M1:20

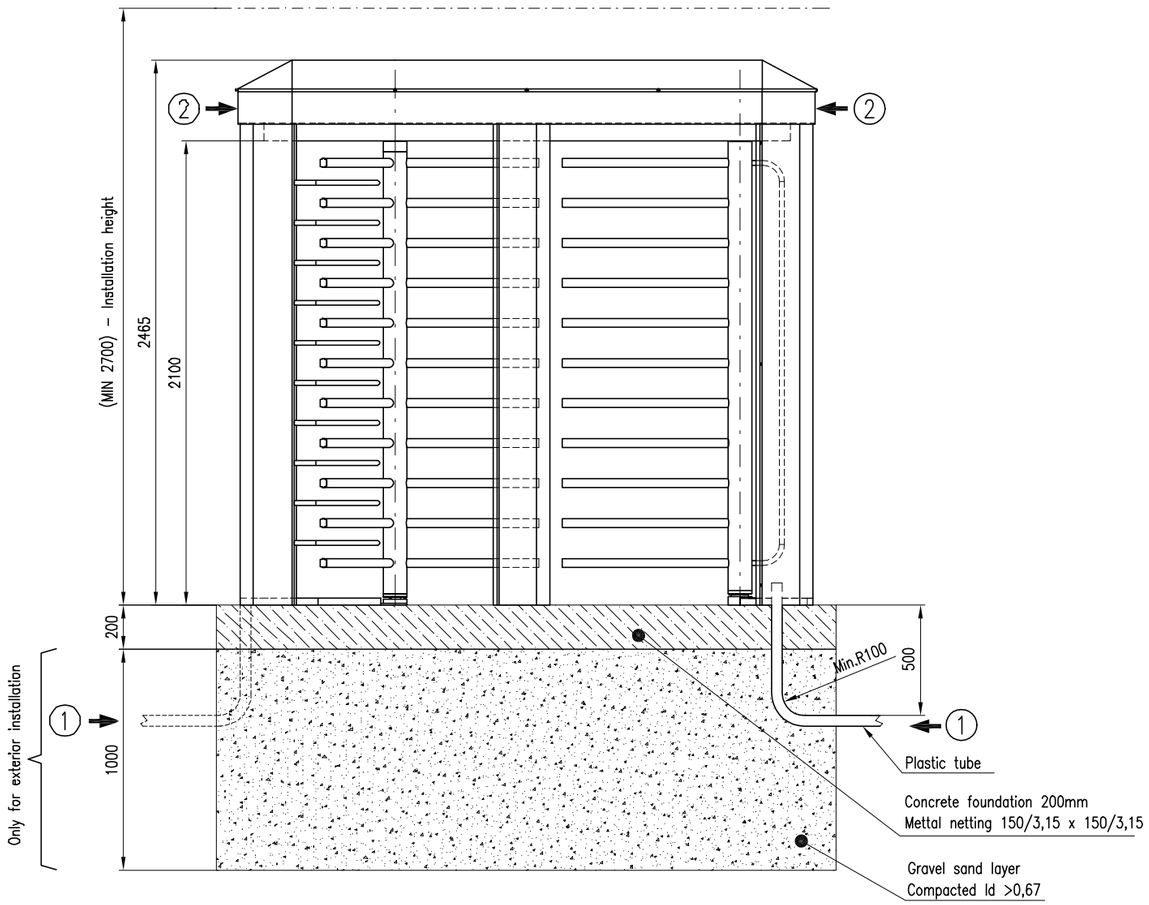

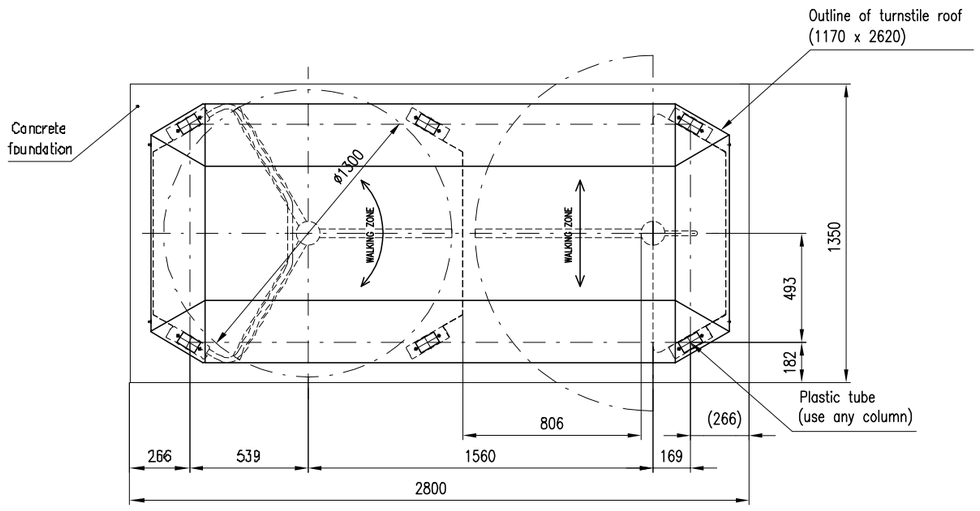

LEGEND:

1. OPTIONS – BOTTOM WIRE INPUT – USABLE MOSTLY FOR EXTERIOR INSTALLATION

2. OPTIONS – TOP WIRE INPUT – USABLE MOSTLY FOR INTERIOR INSTALLATION

Turnstile foundation: REXON-DEA-GATE-FullHeight(800)

M1:10

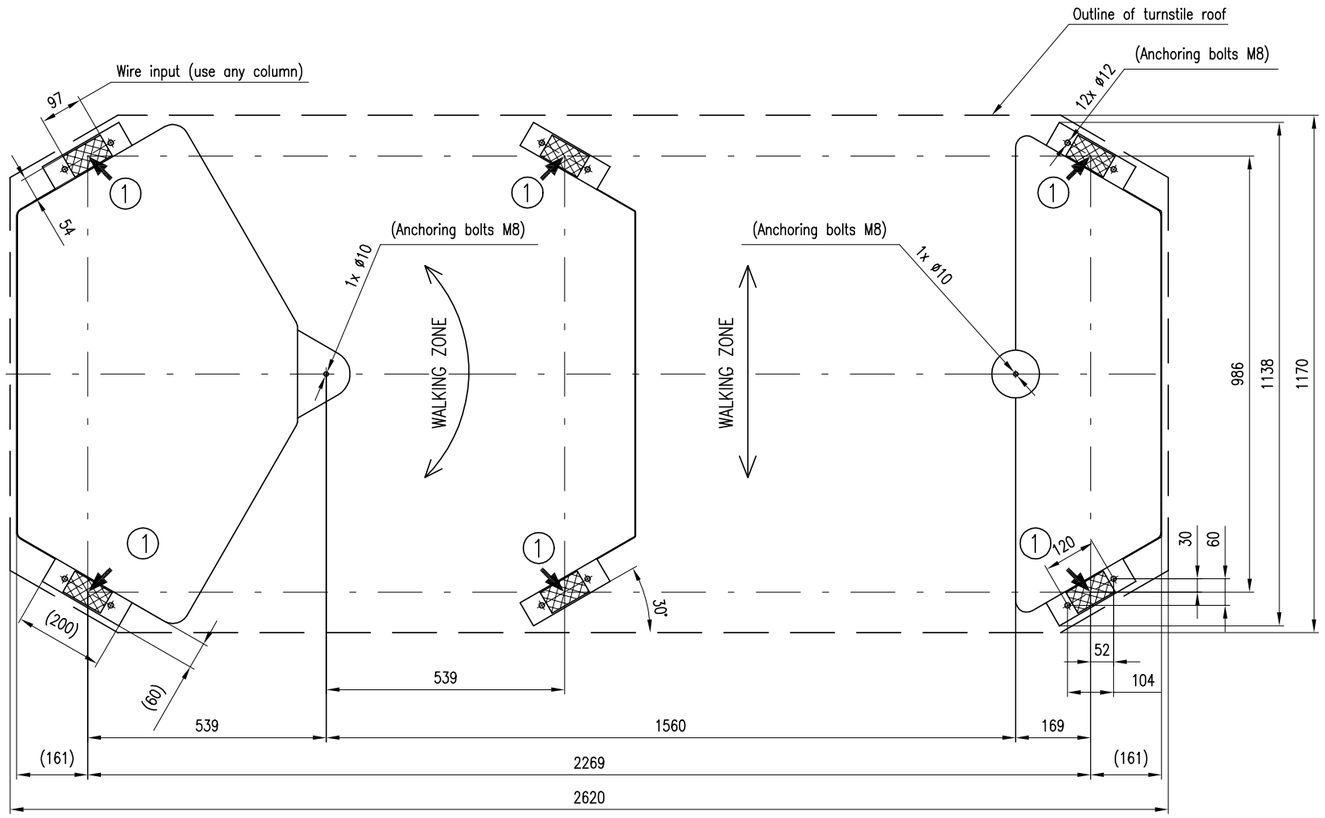

	Date	Drawed by	Material	Order No.	
	26.11.2013				CODARINI
Size A2	Project: Turnstile REXON-DEA-GATE-FullHeight(800)				
Scale 1:10	Title: Anchoring dimensions			D.No. PJ 131126-3	Part/Parts